Micro Differential Pressure Transmitter

GaMicos

GPT251



DESCRIPTION

The GPT251 series uses a silicon MEMS low-pressure sensing chip. Through signal processing circuitry—which includes temperature compensation, linearity compensation, signal amplification, V/I conversion, surge protection, and reverse polarity protection—the device outputs an industry-standard 4–20 mA signal.Fully digital calibration eliminates the need for mechanical potentiometers, resulting in improved temperature drift performance and stability.

This product employs two types of isolation methods at the chip level. For products with a measurement range of less than 5 kPa, the chip is protected by a resilient silicone gel; these are primarily intended for differential pressure measurement of gases that are non-corrosive to silicon and silicone gel. For 5 kPa or greater, the chip is protected by a 316L stainless steel isolation diaphragm and filled with silicone oil, making them suitable for measuring media that are non-corrosive to stainless steel.

SPECIFICATION

Range	Pa	0～±100、500.....1000		
	Kpa	0、2、10.....100		
Pressure Type		Differential pressure		
Output Signal (mA)		4～20		
		0–5 V (0–10), three-wire		
Accuracy		0.25	0.5	1.0
Non-linearity (%FS)		≤0.2	≤0.4	≤0.8
Hysteresis / Repeatability (%FS)		≤0.05	≤0.1	≤0.2
Zero / Sensitivity Temp. Drift (%FS/°C)		≤0.025	≤0.05	≤0.08
Long-term Stability (%FS/year)		≤0.2	≤0.5	≤1.0
Operating Voltage (VDC)		+12–+36 (calibrated at +24)		
Compensated Temperature (°C)		0～+50		
Operating Temperature (°C)		-40～+85		
Overload Capacity (%)		200		
Static Pressure (kPa)		≤200		
Load Resistance (Ω)		R=（U-12.5）/0.02-RD，where U = supply voltage，RD = internal cable resistance		
Response Time (10%–90%), ms		≤1		
Measured Media		<5 kPa: non-corrosive gases，≥5 kPa: fluids compatible with 316L and silicon.		
Diaphragm Material		Silicone gel / 316L diaphragm		
Housing Material		Aluminum alloy		
Process Interface		304 stainless-steel Ø7 barbed fitting		
Ingress Protection		IP66		

Xi 'an Gavin Electronic Technology Co., Ltd T：+86 029-81292510 E：info@gamicos.com W：www.gamicos.com

APPLICATION

Applications include petroleum, chemicals, metallurgy, power generation, light industry and textiles, electronics, pharmaceuticals, food processing and environmental protection. It is also widely applied in HVAC systems, cleanrooms, and automated boiler monitoring.

TRANSMITTER DIMENSIONS

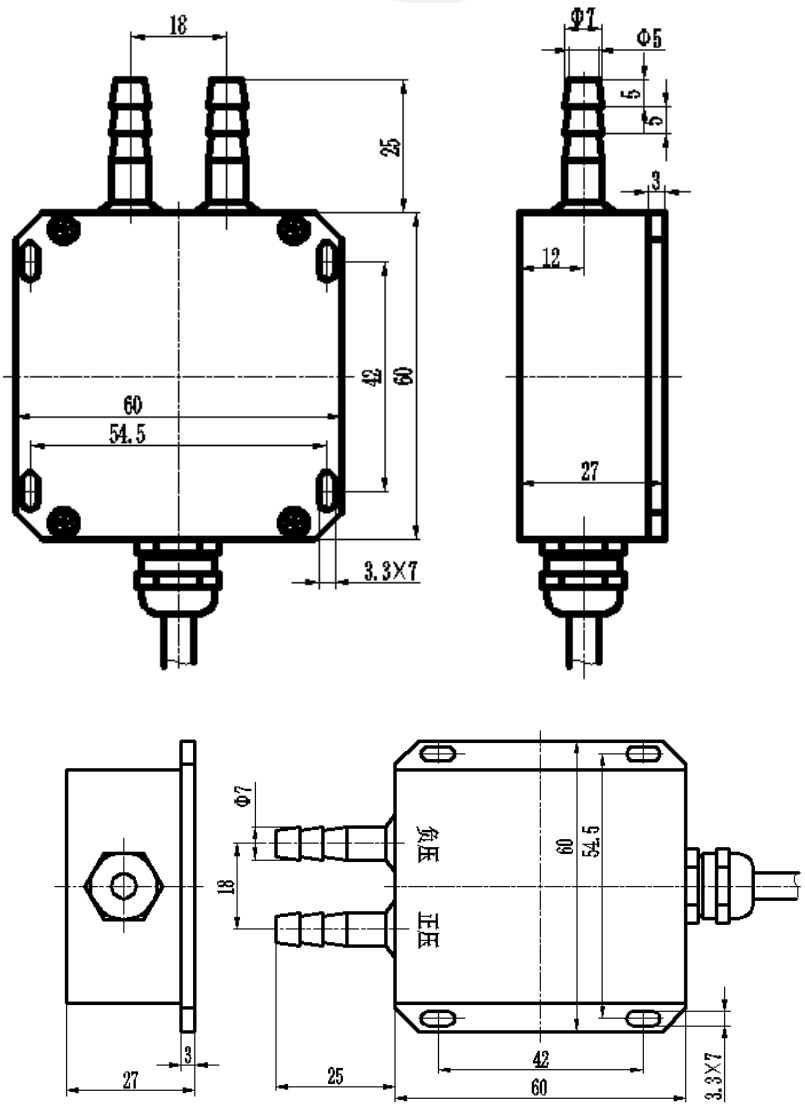

ELECTRICAL INTERFACE

Current Output

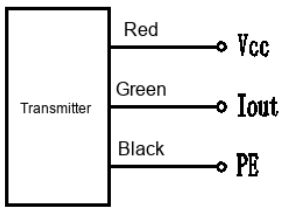

Voltage Output

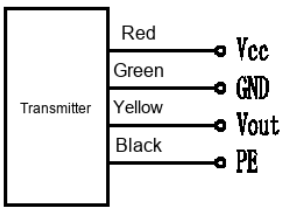

RS485

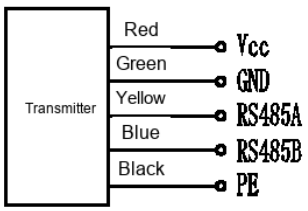

ORDER GUIDE

GPT251	Differential Pressure Transmitter				
	Range	Measuring range: ±100 Pa...100 kPa			
	10n	Unit: Pa. Multiply the first two digits by 10 to the power of n; n is the third digit.			
		Code	Pressure Type		
		D	Differential pressure		
			Code	Supply Voltage	
			U1	24VDC	
			U2	12VDC	
			U3	5VDC	
			U4	3 VDC (3.3 VDC)	
			U5	Other power supply options	
				Code	Output Signal
				E1	4mA ~ 20mADC
				E2	0mA ~ 10mADC
				E3	0mA ~ 20mADC
				V1	1VDC ~ 5VDC
				V2	0VDC ~ 5VDC
				V3	0VDC ~ 10VDC
				V4	0.5VDC ~ 4.5VDC
				V5	Other voltage outputs
				R4	RS485 communication interface
				II	I²C protocol communication
GPT251	10n	D	U1	E1	
GPT251 [010]DU1E1: GPT251 model, 1 kPa differential pressure, 24 V supply, 4–20 mA output.					

PRECAUTIONS

1. On receipt, check that the packaging is intact and that the transmitter model and specifications match your order.
2. Keep the verification certificate and certificate of conformity. Return both with the product when sending it for repair.
3. Observe the mounting orientation. The transmitter is normally calibrated horizontally and should be mounted horizontally.
   For vertical mounting, specify this when ordering or adjust the zero on the secondary instrument.
4. Avoid installation in locations subject to mechanical vibration or strong electromagnetic interference.
5. At low temperatures, ensure that the measured medium remains able to flow for accurate pressure measurement.
6. This precision instrument must be stored indoors in a dry, well-ventilated area away from direct sunlight.